U.S. DEPARTMENT OF HOMELAND SECURITY
Federal Emergency Management Agency
National Flood Insurance Program

OMB No. 1660-0008
Expiration Date: November 30, 2018

ELEVATION CERTIFICATE

Important: Follow the instructions on pages 1–9.

Copy all pages of this Elevation Certificate and all attachments for (1) community official, (2) insurance agent/company, and (3) building owner.

SECTION A – PROPERTY INFORMATION		FOR INSURANCE COMPANY USE
A1. Building Owner's Name Landmark 24		Policy Number:
A2. Building Street Address (including Apt., Unit, Suite, and/or Bldg. No.) or P.O. Route and Box No. 136 Whitaker Way North		Company NAIC Number:
City Richmond Hill	State Georgia	ZIP Code 31324

A3. Property Description (Lot and Block Numbers, Tax Parcel Number, Legal Description, etc.)
Lot 43, Preserve at Sterling Creek, Phase 2, 20th G.M. District, City of Richmond Hill, Bryan County, Georgia, PIN: 054-97-002-040

A4. Building Use (e.g., Residential, Non-Residential, Addition, Accessory, etc.) Residential

A5. Latitude/Longitude: Lat. 31.92012 Long. -81.29813 Horizontal Datum: ☐ NAD 1927 ☒ NAD 1983

A6. Attach at least 2 photographs of the building if the Certificate is being used to obtain flood insurance.

A7. Building Diagram Number 1A

A8. For a building with a crawlspace or enclosure(s):

a) Square footage of crawlspace or enclosure(s) N/A sq ft

b) Number of permanent flood openings in the crawlspace or enclosure(s) within 1.0 foot above adjacent grade N/A

c) Total net area of flood openings in A8.b N/A sq in

d) Engineered flood openings? ☐ Yes ☒ No

A9. For a building with an attached garage:

a) Square footage of attached garage 429 sq ft

b) Number of permanent flood openings in the attached garage within 1.0 foot above adjacent grade 2

c) Total net area of flood openings in A9.b 440 sq in

d) Engineered flood openings? ☒ Yes ☐ No

SECTION B – FLOOD INSURANCE RATE MAP (FIRM) INFORMATION

B1. NFIP Community Name & Community Number	B2. County Name	B3. State
City of Richmond Hill 130018	Bryan	Georgia

B4. Map/Panel Number	B5. Suffix	B6. FIRM Index Date	B7. FIRM Panel Effective/ Revised Date	B8. Flood Zone(s)	B9. Base Flood Elevation(s) (Zone AO, use Base Flood Depth)
13029C0291	D	August 2, 2018	August 2, 2018	AE	11.2'

B10. Indicate the source of the Base Flood Elevation (BFE) data or base flood depth entered in Item B9:
☐ FIS Profile ☒ FIRM ☐ Community Determined ☐ Other/Source:

B11. Indicate elevation datum used for BFE in Item B9: ☐ NGVD 1929 ☒ NAVD 1988 ☐ Other/Source:

B12. Is the building located in a Coastal Barrier Resources System (CBRS) area or Otherwise Protected Area (OPA)? ☐ Yes ☒ No
Designation Date: ☐ CBRS ☐ OPA

ELEVATION CERTIFICATE

OMB No. 1660-0008
Expiration Date: November 30, 2018

IMPORTANT: In these spaces, copy the corresponding information from Section A.

FOR INSURANCE COMPANY USE

Building Street Address (including Apt., Unit, Suite, and/or Bldg. No.) or P.O. Route and Box No.: 136 Whitaker Way North

Policy Number:

City: Richmond Hill | State: Georgia | ZIP Code: 31324

Company NAIC Number

SECTION C – BUILDING ELEVATION INFORMATION (SURVEY REQUIRED)

C1. Building elevations are based on: ☐ Construction Drawings* ☐ Building Under Construction* ☒ Finished Construction

*A new Elevation Certificate will be required when construction of the building is complete.

C2. Elevations – Zones A1–A30, AE, AH, A (with BFE), VE, V1–V30, V (with BFE), AR, AR/A, AR/AE, AR/A1–A30, AR/AH, AR/AO. Complete Items C2.a–h below according to the building diagram specified in Item A7. In Puerto Rico only, enter meters.

Benchmark Utilized: Local Vertical Datum: NAVD 88

Indicate elevation datum used for the elevations in items a) through h) below.

☐ NGVD 1929 ☒ NAVD 1988 ☐ Other/Source:

Datum used for building elevations must be the same as that used for the BFE.

		Check the measurement used.	
a) Top of bottom floor (including basement, crawlspace, or enclosure floor)	12 . 2	☒ feet	☐ meters
b) Top of the next higher floor	N/A .	☐ feet	☐ meters
c) Bottom of the lowest horizontal structural member (V Zones only)	N/A .	☐ feet	☐ meters
d) Attached garage (top of slab)	11 . 7	☒ feet	☐ meters
e) Lowest elevation of machinery or equipment servicing the building (Describe type of equipment and location in Comments)	12 . 2	☒ feet	☐ meters
f) Lowest adjacent (finished) grade next to building (LAG)	11 . 1	☒ feet	☐ meters
g) Highest adjacent (finished) grade next to building (HAG)	11 . 3	☒ feet	☐ meters
h) Lowest adjacent grade at lowest elevation of deck or stairs, including structural support	N/A .	☐ feet	☐ meters

SECTION D – SURVEYOR, ENGINEER, OR ARCHITECT CERTIFICATION

This certification is to be signed and sealed by a land surveyor, engineer, or architect authorized by law to certify elevation information. I certify that the information on this Certificate represents my best efforts to interpret the data available. I understand that any false statement may be punishable by fine or imprisonment under 18 U.S. Code, Section 1001.

Were latitude and longitude in Section A provided by a licensed land surveyor? ☒ Yes ☐ No ☒ Check here if attachments.

Certifier's Name: Randall A. Richter | License Number: GA# 3279

Title: Professional Surveyor

Company Name: Coleman Company Inc.

Address: 17 Park of Commerce Boulevard, Suite 201

City: Savannah | State: GA | ZIP Code: 31405

Signature | Date: 4/8/2019 | Telephone: 912-200-3041

GEORGIA REGISTERED No. 003279 LAND SURVEYOR RANDALL A. RICHTER 4/24/19

Copy all pages of this Elevation Certificate and all attachments for (1) community official, (2) insurance agent/company, and (3) building owner.

Comments (including type of equipment and location, per C2(e), if applicable)

See attached comments.

ELEVATION CERTIFICATE

OMB No. 1660-0008
Expiration Date: November 30, 2018

IMPORTANT: In these spaces, copy the corresponding information from Section A.

Building Street Address (including Apt., Unit, Suite, and/or Bldg. No.) or P.O. Route and Box No.			FOR INSURANCE COMPANY USE
136 Whitaker Way North			Policy Number:
City	State	ZIP Code	Company NAIC Number
Richmond Hill	Georgia	31324	

SECTION E – BUILDING ELEVATION INFORMATION (SURVEY NOT REQUIRED) FOR ZONE AO AND ZONE A (WITHOUT BFE)

For Zones AO and A (without BFE), complete Items E1–E5. If the Certificate is intended to support a LOMA or LOMR-F request, complete Sections A, B,and C. For Items E1–E4, use natural grade, if available. Check the measurement used. In Puerto Rico only, enter meters.

E1. Provide elevation information for the following and check the appropriate boxes to show whether the elevation is above or below the highest adjacent grade (HAG) and the lowest adjacent grade (LAG).

a) Top of bottom floor (including basement, crawlspace, or enclosure) is _____ . _____ ☐ feet ☐ meters ☐ above or ☐ below the HAG.

b) Top of bottom floor (including basement, crawlspace, or enclosure) is _____ . _____ ☐ feet ☐ meters ☐ above or ☐ below the LAG.

E2. For Building Diagrams 6–9 with permanent flood openings provided in Section A Items 8 and/or 9 (see pages 1–2 of Instructions), the next higher floor (elevation C2.b in the diagrams) of the building is _____ . _____ ☐ feet ☐ meters ☐ above or ☐ below the HAG.

E3. Attached garage (top of slab) is _____ . _____ ☐ feet ☐ meters ☐ above or ☐ below the HAG.

E4. Top of platform of machinery and/or equipment servicing the building is _____ . _____ ☐ feet ☐ meters ☐ above or ☐ below the HAG.

E5. Zone AO only: If no flood depth number is available, is the top of the bottom floor elevated in accordance with the community's floodplain management ordinance? ☐ Yes ☐ No ☐ Unknown. The local official must certify this information in Section G.

SECTION F – PROPERTY OWNER (OR OWNER'S REPRESENTATIVE) CERTIFICATION

The property owner or owner's authorized representative who completes Sections A, B, and E for Zone A (without a FEMA-issued or community-issued BFE) or Zone AO must sign here. The statements in Sections A, B, and E are correct to the best of my knowledge.

Property Owner or Owner's Authorized Representative's Name			
Address	City	State	ZIP Code
Signature	Date	Telephone	

Comments

☐ Check here if attachments.

ELEVATION CERTIFICATE

OMB No. 1660-0008
Expiration Date: November 30, 2018

IMPORTANT: In these spaces, copy the corresponding information from Section A.			FOR INSURANCE COMPANY USE
Building Street Address (including Apt., Unit, Suite, and/or Bldg. No.) or P.O. Route and Box No. 136 Whitaker Way North			Policy Number:
City Richmond Hill	State Georgia	ZIP Code 31324	Company NAIC Number

SECTION G – COMMUNITY INFORMATION (OPTIONAL)

The local official who is authorized by law or ordinance to administer the community's floodplain management ordinance can complete Sections A, B, C (or E), and G of this Elevation Certificate. Complete the applicable item(s) and sign below. Check the measurement used in Items G8–G10. In Puerto Rico only, enter meters.

G1. ☐ The information in Section C was taken from other documentation that has been signed and sealed by a licensed surveyor, engineer, or architect who is authorized by law to certify elevation information. (Indicate the source and date of the elevation data in the Comments area below.)

G2. ☐ A community official completed Section E for a building located in Zone A (without a FEMA-issued or community-issued BFE) or Zone AO.

G3. ☐ The following information (Items G4–G10) is provided for community floodplain management purposes.

G4. Permit Number	G5. Date Permit Issued	G6. Date Certificate of Compliance/Occupancy Issued

G7. This permit has been issued for: ☐ New Construction ☐ Substantial Improvement

G8. Elevation of as-built lowest floor (including basement) of the building: _____ . _____ ☐ feet ☐ meters Datum _____

G9. BFE or (in Zone AO) depth of flooding at the building site: _____ . _____ ☐ feet ☐ meters Datum _____

G10. Community's design flood elevation: _____ . _____ ☐ feet ☐ meters Datum _____

Local Official's Name	Title
Community Name	Telephone
Signature	Date

Comments (including type of equipment and location, per C2(e), if applicable)

☐ Check here if attachments.

ELEVATION CERTIFICATE

BUILDING PHOTOGRAPHS

See Instructions for Item A6.

OMB No. 1660-0008
Expiration Date: November 30, 2018

IMPORTANT: In these spaces, copy the corresponding information from Section A.

Building Street Address (including Apt., Unit, Suite, and/or Bldg. No.) or P.O. Route and Box No. 136 Whitaker Way North			FOR INSURANCE COMPANY USE Policy Number:
City Richmond Hill	State Georgia	ZIP Code 31324	Company NAIC Number

If using the Elevation Certificate to obtain NFIP flood insurance, affix at least 2 building photographs below according to the instructions for Item A6. Identify all photographs with date taken; "Front View" and "Rear View"; and, if required, "Right Side View" and "Left Side View." When applicable, photographs must show the foundation with representative examples of the flood openings or vents, as indicated in Section A8. If submitting more photographs than will fit on this page, use the Continuation Page.

Photo One Caption FRONT VIEW 4/8/2019

Photo Two Caption REAR VIEW 4/8/2019

ELEVATION CERTIFICATE

BUILDING PHOTOGRAPHS

Continuation Page

OMB No. 1660-0008
Expiration Date: November 30, 2018

IMPORTANT: In these spaces, copy the corresponding information from Section A.

Building Street Address (including Apt., Unit, Suite, and/or Bldg. No.) or P.O. Route and Box No.			FOR INSURANCE COMPANY USE
136 Whitaker Way North			Policy Number:
City	State	ZIP Code	Company NAIC Number
Richmond Hill	Georgia	31324	

If submitting more photographs than will fit on the preceding page, affix the additional photographs below. Identify all photographs with: date taken; "Front View" and "Rear View"; and, if required, "Right Side View" and "Left Side View." When applicable, photographs must show the foundation with representative examples of the flood openings or vents, as indicated in Section A8.

Photo One Caption

LEFT VIEW 4/8/2019

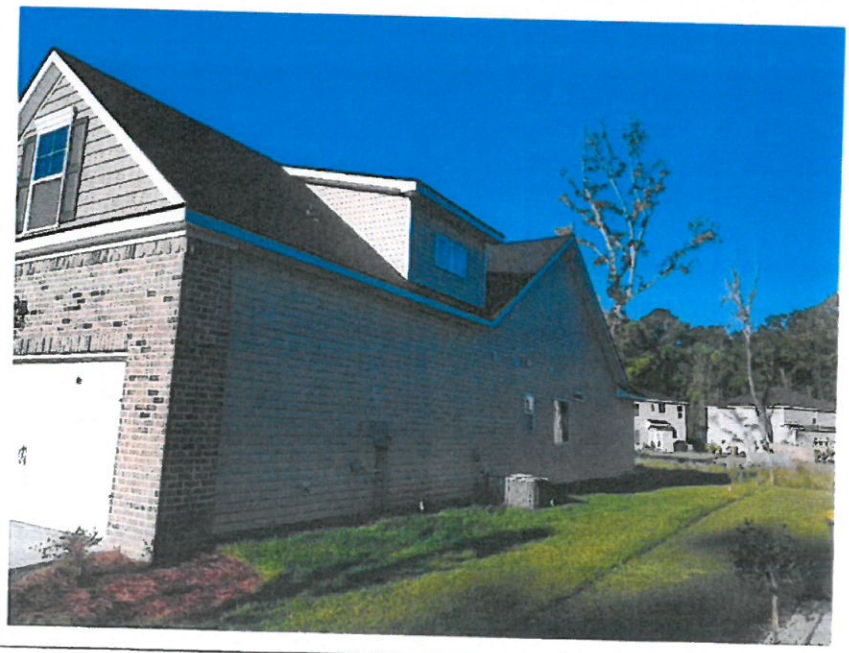

Photo Two Caption

RIGHT VIEW 4/8/2019

ELEVATION CERTIFICATE

ADDITIONAL BUILDING PHOTOGRAPHS

Continuation Page

OMB No. 1660-0008
Expiration Date: November 30, 2018

IMPORTANT: In these spaces, copy the corresponding information from Section A.

Building Street Address (including Apt., Unit, Suite, and/or Bldg. No.) or P.O. Route and Box No. 136 Whitaker Way North			FOR INSURANCE COMPANY USE Policy Number:
City Richmond Hill	State Georgia	ZIP Code 31324	Company NAIC Number

If submitting more photographs than will fit on the preceding page, affix the additional photographs below. Identify all photographs with: date taken; "Front View" and "Rear View"; and, if required, "Right Side View" and "Left Side View." When applicable, photographs must show the foundation with representative examples of the flood openings or vents, as indicated in Section A8.

Photo One Caption

VENT 4/17/2019

Photo Two Caption

VENT 4/17/2019

Comments:

Section A3: PIN: 2-1016-02-134 (Subdivision Map Book 669, Pages 7-10)

Section A9: Garage is vented by (2) engineered vents. Flood Flaps, LLC – model FFNF05. See attached certification.

Section B9: A 1' (one foot) free board is required by the City of Richmond Hill Flood Damage Prevention Ordinance.

Section C2: Benchmark utilized from Subdivision Map Book 669, Pages 7-10.

Section C2a: Elevation is top of finished floor for living space.

Section C2e: Lowest elevation of machinery servicing the building is the top of the HVAC compressor pad.

Special Note: This property was issued a permit while in AE(11)but according to the revised effective panel dated August 2, 2018 the property designation changed to AE(12).

ICC EVALUATION SERVICE

In Cooperation with Innovation RESEARCH LABS

Most Widely Accepted and Trusted

ICC-ES Evaluation Report

ESR-3560

ICC-ES | (800) 423-6587 | (562) 699-0543 | www.icc-es.org

Reissued 09/2018

This report is subject to renewal 09/2019.

DIVISION: 08 00 00—OPENINGS

SECTION: 08 95 43—VENTS/FOUNDATION FLOOD VENTS

REPORT HOLDER:

FLOOD FLAPS®, LLC

EVALUATION SUBJECT:

FLOOD FLAPS® AUTOMATIC FLOOD VENTS: MODELS FFWF12; FFNF12; FFWF08; FFNF08; FFWF05; FFNF05

ICC ES ICC ES PMG ICC ES LISTED

"2014 Recipient of Prestigious Western States Seismic Policy Council (WSSPC) Award in Excellence"

A Subsidiary of ICC INTERNATIONAL CODE COUNCIL®

ICC-ES Evaluation Reports are not to be construed as representing aesthetics or any other attributes not specifically addressed, nor are they to be construed as an endorsement of the subject of the report or a recommendation for its use. There is no warranty by ICC Evaluation Service, LLC, express or implied, as to any finding or other matter in this report, or as to any product covered by the report.

ANSI ACCREDITED ISO/IEC 17065 Product Certification Body #1000

Copyright © 2018 ICC Evaluation Service, LLC. All rights reserved.

ICC-ES Evaluation Report

ESR-3560

Reissued September 2018
This report is subject to renewal September 2019.

www.icc-es.org | (800) 423-6587 | (562) 699-0543 *A Subsidiary of the International Code Council®*

DIVISION: 08 00 00—OPENINGS
Section: 08 95 43—Vents/Foundation Flood Vents

REPORT HOLDER:

FLOOD FLAPS®, LLC

EVALUATION SUBJECT:

FLOOD FLAPS® AUTOMATIC FLOOD VENTS: MODELS FFWF12; FFNF12; FFWF08; FFNF08; FFWF05; FFNF05

1.0 EVALUATION SCOPE

Compliance with the following codes:

- 2018, 2015, 2012 and 2009 *International Building Code®* (IBC)
- 2018, 2015, 2012 and 2009 *International Residential Code®* (IRC)

Properties evaluated:

- Physical operation
- Water flow
- Weathering

2.0 USES

Flood Flaps® automatic flood vents are used to provide for the equalization of hydrostatic flood forces on exterior walls. Certain models also allow natural ventilation.

3.0 DESCRIPTION

3.1 General:

Flood Flaps® automatic flood vents are engineered mechanically operated flood vents (FVs) that automatically allow flood waters to enter and exit enclosed areas. The FVs are constructed of ABS plastic which serves as the FV's housing, and a front grill that contains an anodized metal screen imbedded in polypropylene plastic. On contact with rising flood water, the grill will disengage from its secured position, allowing flood water and debris to flow through in either direction. The FVs are available in two series as described in Section 3.3.

The sealed series models contain two rubber flaps that close the FV to the passage of air when using with conditioned areas or sealed crawl spaces. In the same manner as the grill, the two rubber flaps are pushed open by water pressure, allowing water and debris to flow through the FV in either direction. See Figure 1 for an illustration of the Flood Flaps® automatic FV.

3.2 Engineered Opening:

The Flood Flaps® automatic FVs comply with the design principle noted in Sections 2.7.2.2 and 2.7.3 of ASCE/SEI 24-14 (2018 and 2015 IBC and IRC) [Section 2.6.2.2 of ASCE/SEI 24-05 (2012 and 2009 IBC and IRC)] for a rate of rise and fall of 5 feet per hour (0.423 mm/s). In order to comply with the engineered opening requirement of ASCE/SEI 24, Flood Flaps® automatic FVs must be installed in accordance with Section 4.0.

3.3 Flood Vent Series Models:

Flood Flaps® automatic FVs are available in two series with multiple models and sizes as described in Table 1. The sealed series models, designated FFWF, include two rubber flaps for the prevention of air flow. The multi-purpose series, designated FFNF, omits the rubber flaps.

3.4 Natural Ventilation:

Flood Flaps® automatic FV models FFNF12, FFNF08, FFNF05, and FFNF02 have metal screens with $^1/_4$ inch by $^1/_4$ inch (6 mm by 6 mm) openings and provide 37 square inches (0.02 m^2) of net free opening to supply natural ventilation for under-floor ventilation. Flood Flaps® automatic FV models FFWF12, FFWF08, and FFWF05 have not been evaluated for use as openings for under-floor ventilation.

4.0 DESIGN AND INSTALLATION

Flood Flaps® automatic FVs are designed to be installed into walls of existing or new construction. Installation of the FVs must be in accordance with the manufacturer's instructions, the applicable code and this report. Flood Flaps® automatic FVs can be installed in wood, masonry and concrete walls up to a thickness of 12 inches (305 mm). In order to comply with the engineered opening design principle noted in Sections 2.7.2.2 and 2.7.3 of ASCE/SEI 24-14 (2018 and 2015 IBC and IRC) [Section 2.6.2.2 of ASCE/SEI 24-05 (2012 and 2009 IBC and IRC)], the Flood Flaps® FVs must be installed as follows:

- With a minimum of two openings on different sides of each enclosed area.
- With a minimum of one FV for every 220 square feet (20 m^2) of enclosed area.
- Below the base flood elevation.
- With the bottom of the FV located a maximum of 12 inches (305 mm) above grade.

5.0 CONDITIONS OF USE

The Flood Flaps® automatic flood vents described in this report comply with, or are suitable alternatives to what is

ICC-ES Evaluation Reports are not to be construed as representing aesthetics or any other attributes not specifically addressed, nor are they to be construed as an endorsement of the subject of the report or a recommendation for its use. There is no warranty by ICC Evaluation Service, LLC, express or implied, as to any finding or other matter in this report, or as to any product covered by the report.

Copyright © 2018 ICC Evaluation Service, LLC. All rights reserved.

specified in, those codes listed in Section 1.0 of this report, subject to the following conditions:

5.1 The Flood Flaps® automatic FVs must be installed in accordance with this report, the applicable code and the manufacturer's installation instructions. In the event of a conflict, the instructions in this report govern.

5.2 The Flood Flaps® automatic FVs must not be used in place of "breakaway walls" in coastal high hazard areas, but are permitted for use in conjunction with breakaway walls in other areas.

6.0 EVIDENCE SUBMITTED

Data in accordance with the ICC-ES Acceptance Criteria for Mechanically Operated Flood Vents (AC364), dated August 2015 (editorially revised October 2017).

7.0 IDENTIFICATION

7.1 The Flood Flaps® models recognized in this report are identified by a label bearing the manufacturer's name, the model number, and the evaluation report number (ESR-3560).

7.2 The report holder's contact information is the following:

FLOOD FLAPS®, LLC
POST OFFICE BOX 1003
ISLE OF PALMS, SOUTH CAROLINA 29451
(843) 881-0190
www.floodflaps.com
info@floodflaps.com

TABLE 1—FLOOD FLAP AUTOMATIC FLOOD VENT MODEL SIZES

MODEL NUMBER	MODEL DESIGNATION	ROUGH OPENING (Width X Height) (inches)	VENT SIZE (W X H X D) (inches)	ENCLOSED AREA COVERAGE (ft^2)	NET FREE AREA OPENING[1] (in^2)
FFWF12	Sealed Series	16 x 8	$15^5/_8$ X $7^3/_4$ X 12	220	NA
FFNF12	Multi-Purpose	16 x 8	$15^5/_8$ X $7^3/_4$ X 12	220	37
FFWF08	Sealed Series	16 x 8	$15^5/_8$ x $7^3/_4$ x 8	220	NA
FFNF08	Multi-Purpose	16 x 8	$15^5/_8$ x $7^3/_4$ x 8	220	37
FFWF05	Sealed Series	16 x 8	$15^5/_8$ x $7^3/_4$ x 5	220	NA
FFNF05	Multi-Purpose	16 x 8	$15^5/_8$ x $7^3/_4$ x 5	220	37

For **SI**: 1 inch = 25.4 mm; 1 f^{t2} = 0.093 m^2

[1]For under-floor ventilation only.

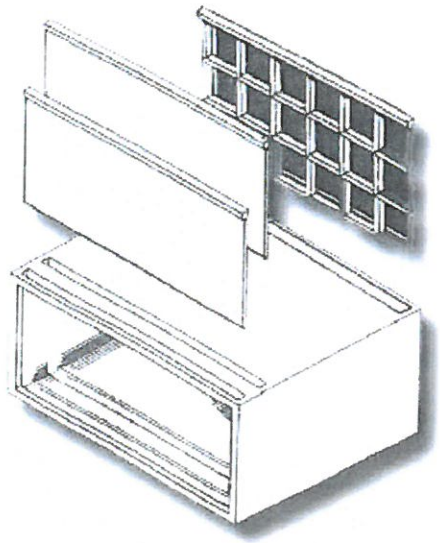

FIGURE 1—FLOOD FLAPS® AUTOMATIC FLOOD VENT

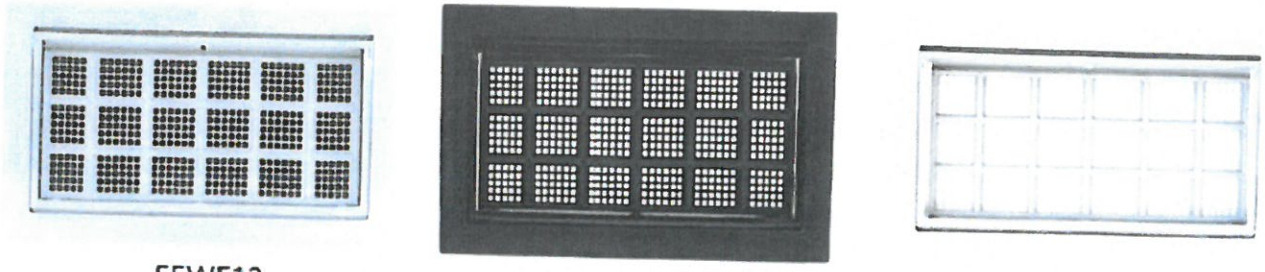

FFWF12 FFNF08 FFNF05

FIGURE 2—FLOOD FLAPS® AUTOMATIC FLOOD VENT SERIES MODELS

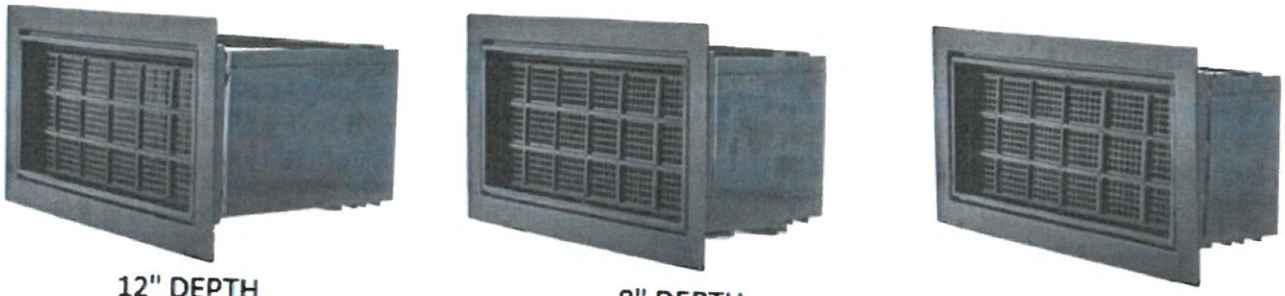

12" DEPTH 8" DEPTH 5" DEPTH

FIGURE 3—FLOOD FLAPS® AUTOMATIC FLOOD VENTS MULTIPLE DEPTH OFFERINGS

ICC-ES Evaluation Report

ESR-3560 FBC Supplement

Reissued September 2018
This report is subject to renewal September 2019.

www.icc-es.org | (800) 423-6587 | (562) 699-0543 *A Subsidiary of the International Code Council®*

DIVISION: 08 00 00—OPENINGS
Section: 08 95 43—Vents/Foundation Flood Vents

REPORT HOLDER:

FLOOD FLAPS®, LLC

EVALUATION SUBJECT:

FLOOD FLAPS® AUTOMATIC FLOOD VENTS: MODELS FFWF12; FFNF12; FFWF08; FFNF08; FFWF05; FFNF05

1.0 REPORT PURPOSE AND SCOPE

Purpose:

The purpose of this evaluation report supplement is to indicate that Flood Flaps® automatic flood vents, recognized in ICC-ES master evaluation report ESR-3560, have also been evaluated for compliance with the codes noted below.

Applicable code editions:

- 2017 *Florida Building Code—Building*
- 2017 *Florida Building Code—Residential*

2.0 CONCLUSIONS

The Flood Flaps flood vents, described in Sections 2.0 through 7.0 of the master evaluation report ESR-3560, comply with the *Florida Building Code—Building* and the *Florida Building Code—Residential*, provided the design and installation are in accordance with the 2015 *International Building Code®* provisions noted in the master report.

Use of the Flood Flaps flood vents has also been found to be in compliance with the High-Velocity Hurricane Zone provisions of the *Florida Building Code—Building* and the *Florida Building Code—Residential*.

For products falling under Florida Rule 9N-3, verification that the report holder's quality-assurance program is audited by a quality-assurance entity approved by the Florida Building Commission for the type of inspections being conducted is the responsibility of an approved validation entity (or the code official, when the report holder does not possess an approval by the Commission).

This supplement expires concurrently with the master report, reissued September 2018.

ICC-ES Evaluation Reports are not to be construed as representing aesthetics or any other attributes not specifically addressed, nor are they to be construed as an endorsement of the subject of the report or a recommendation for its use. There is no warranty by ICC Evaluation Service, LLC, express or implied, as to any finding or other matter in this report, or as to any product covered by the report.

Copyright © 2018 ICC Evaluation Service, LLC. All rights reserved.